MONROE

T 0009

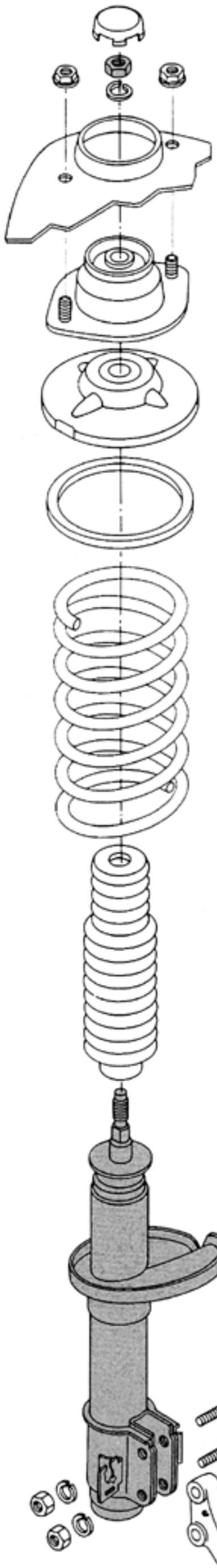

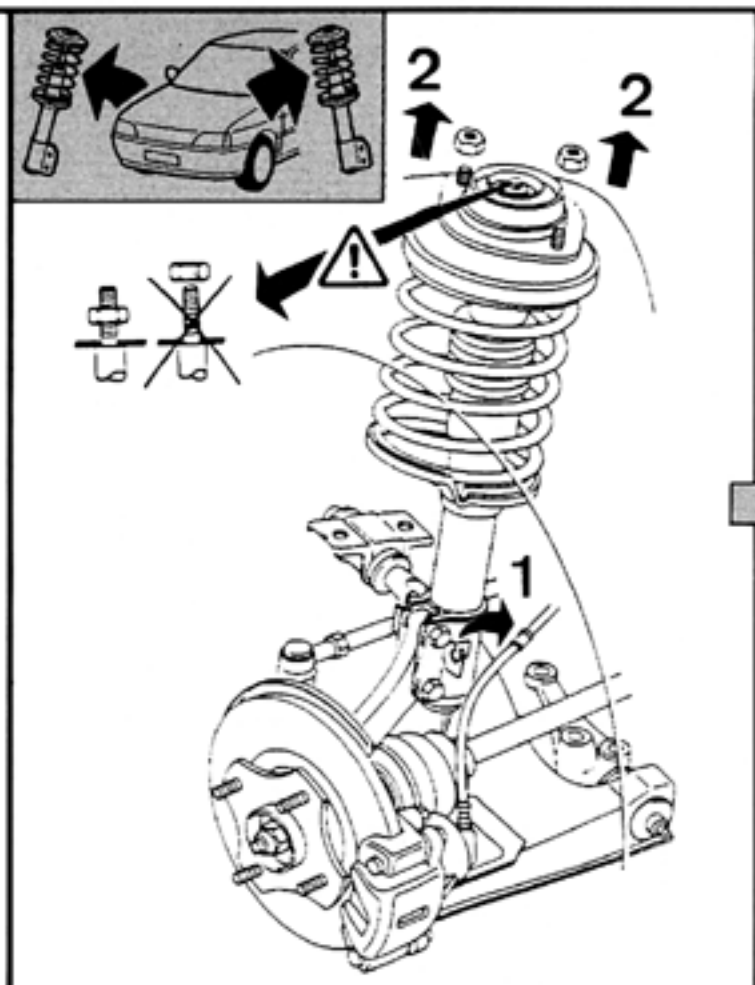

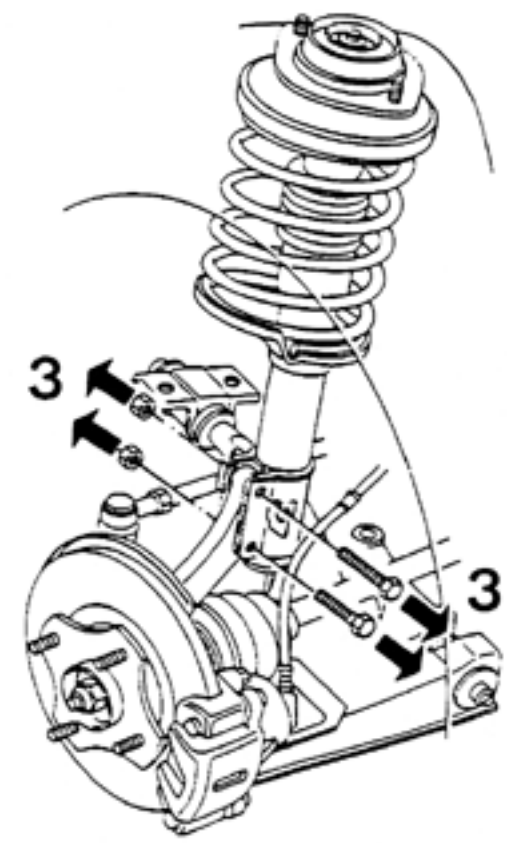

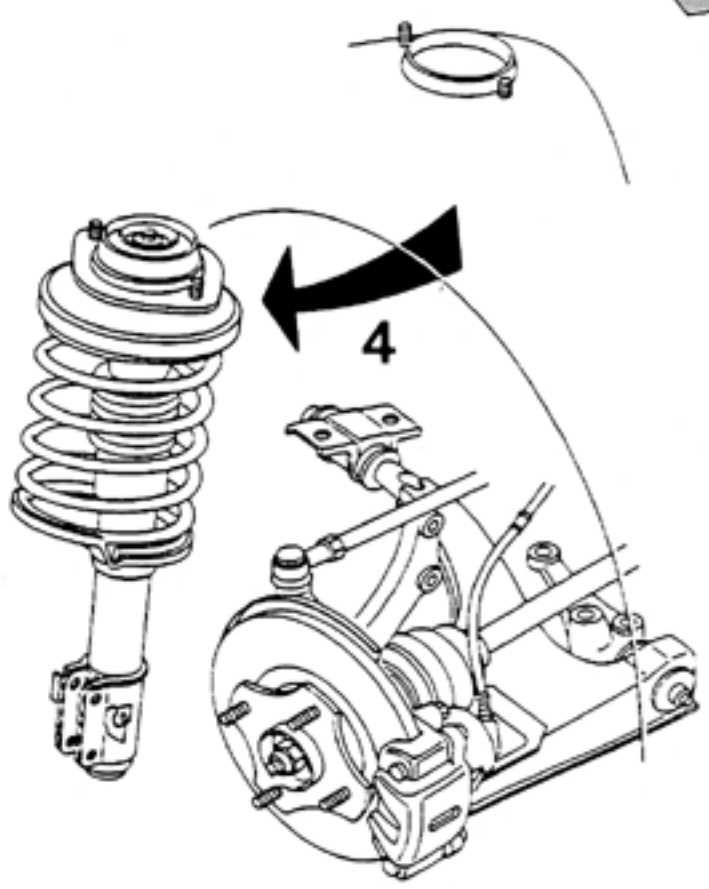

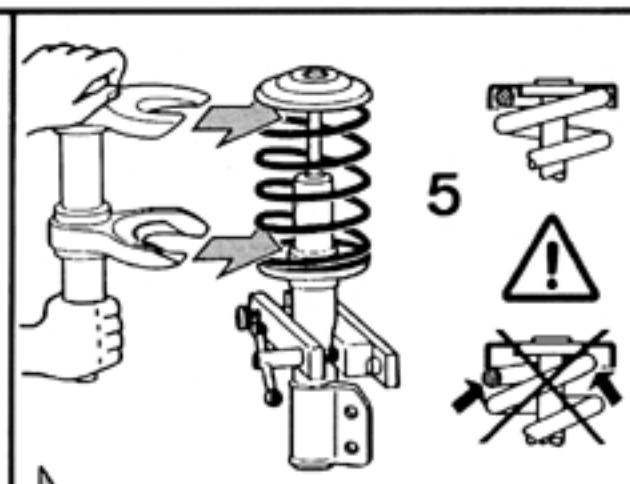

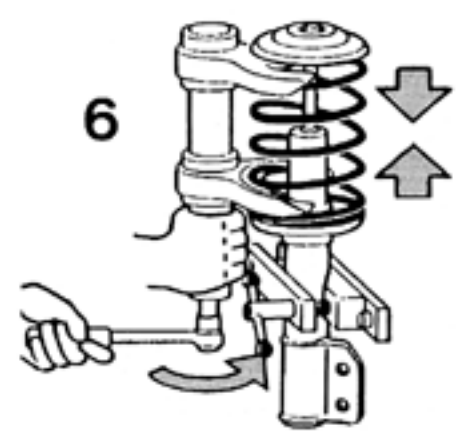

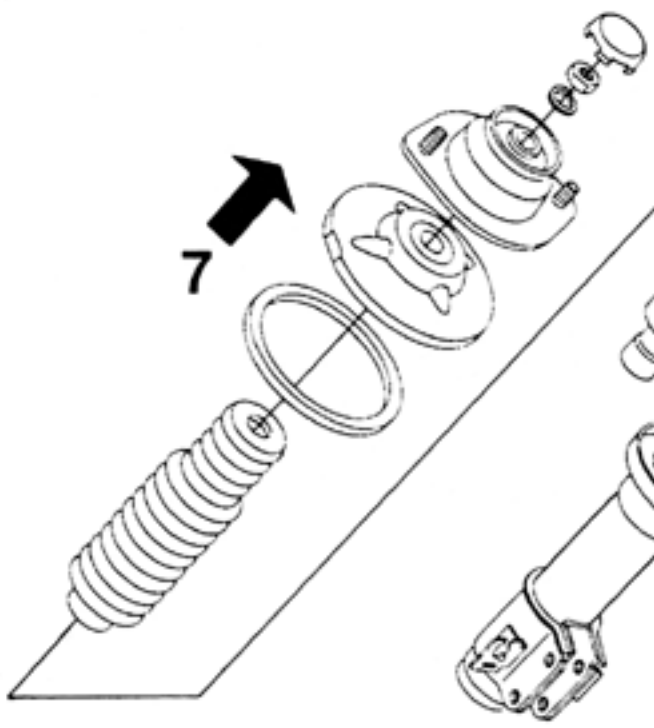

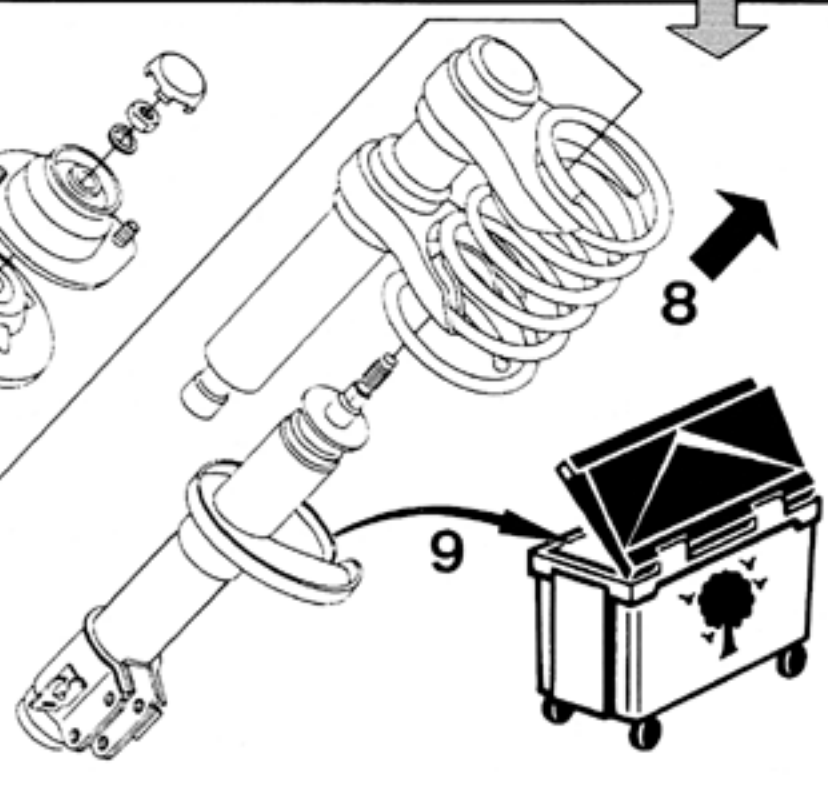

PRINTED IN BELGIUM 07/98

© Monroe all rights reserved