MONROE

T 0107

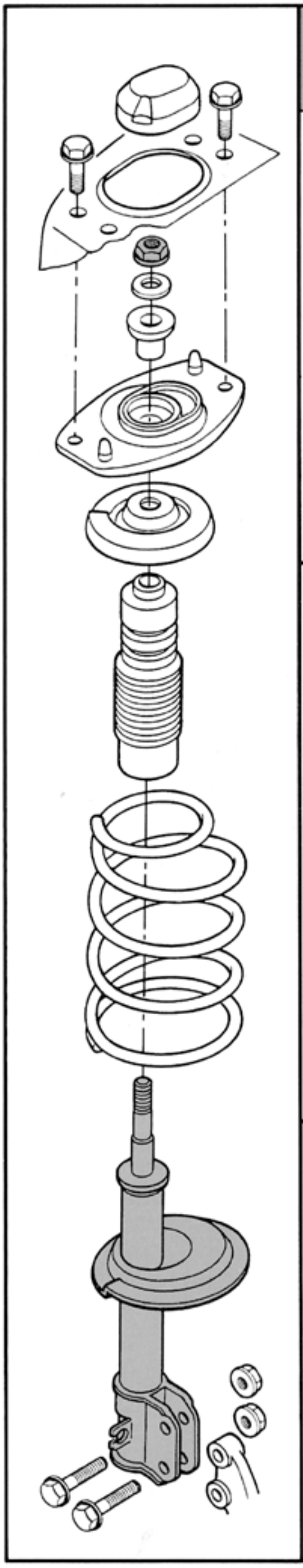

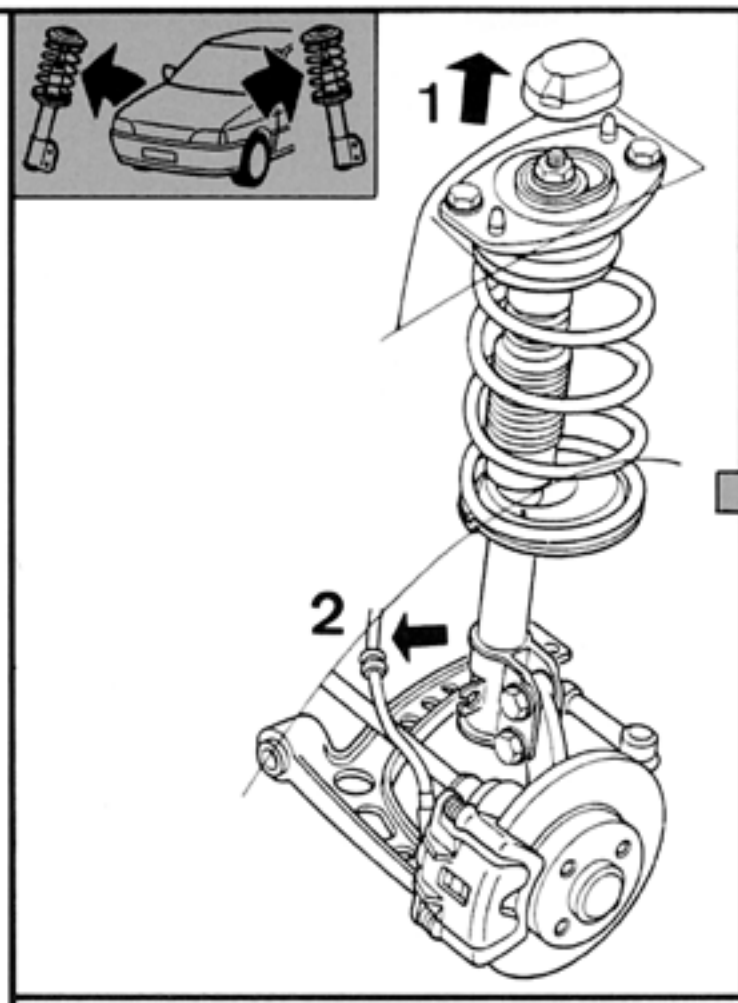

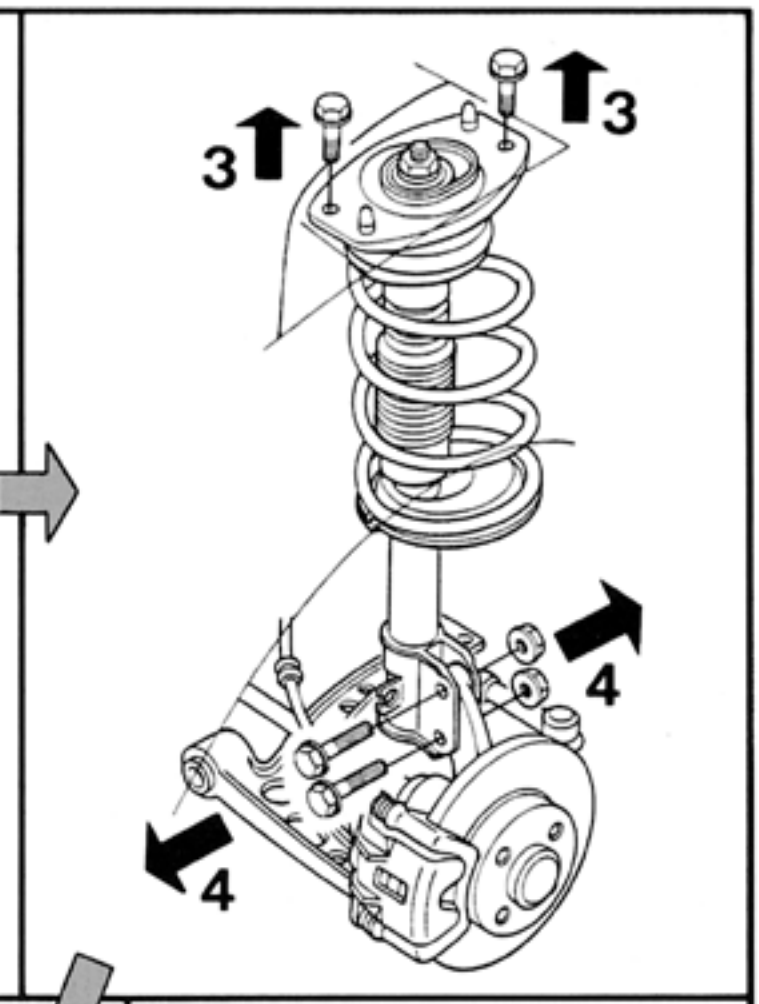

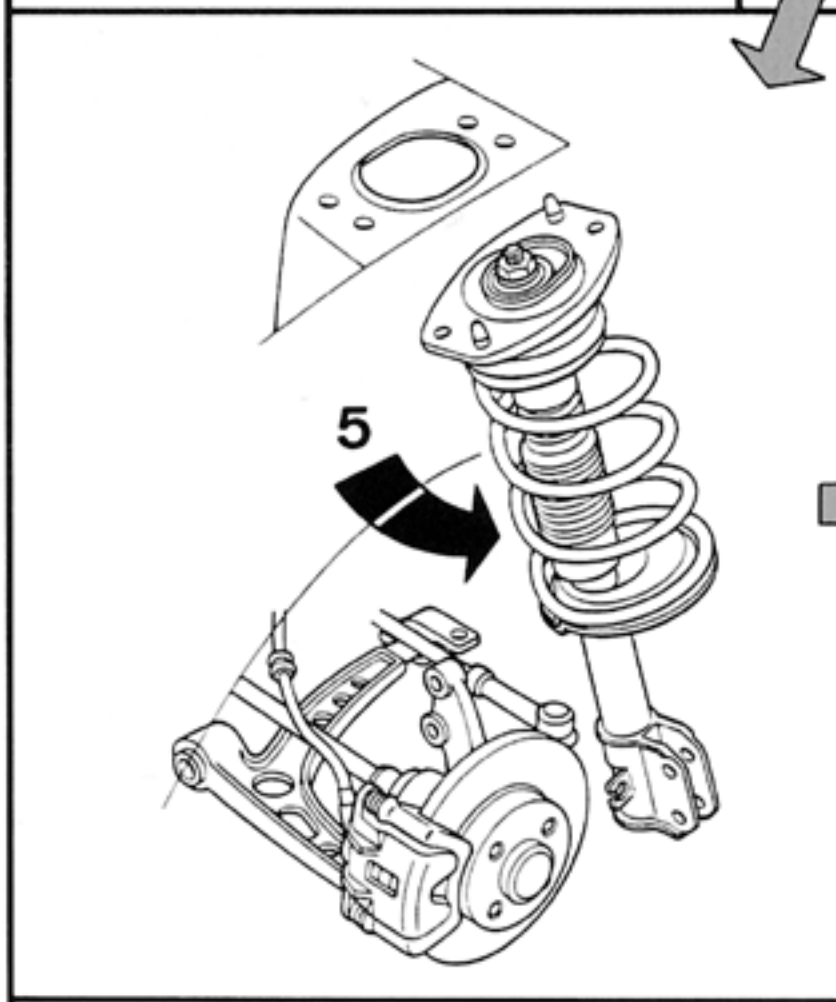

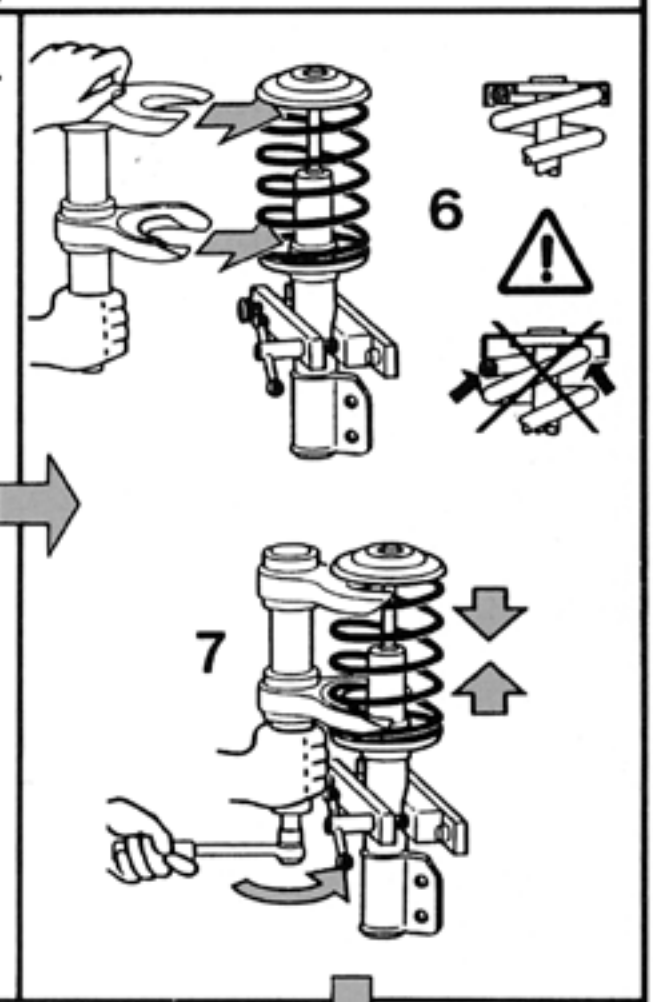

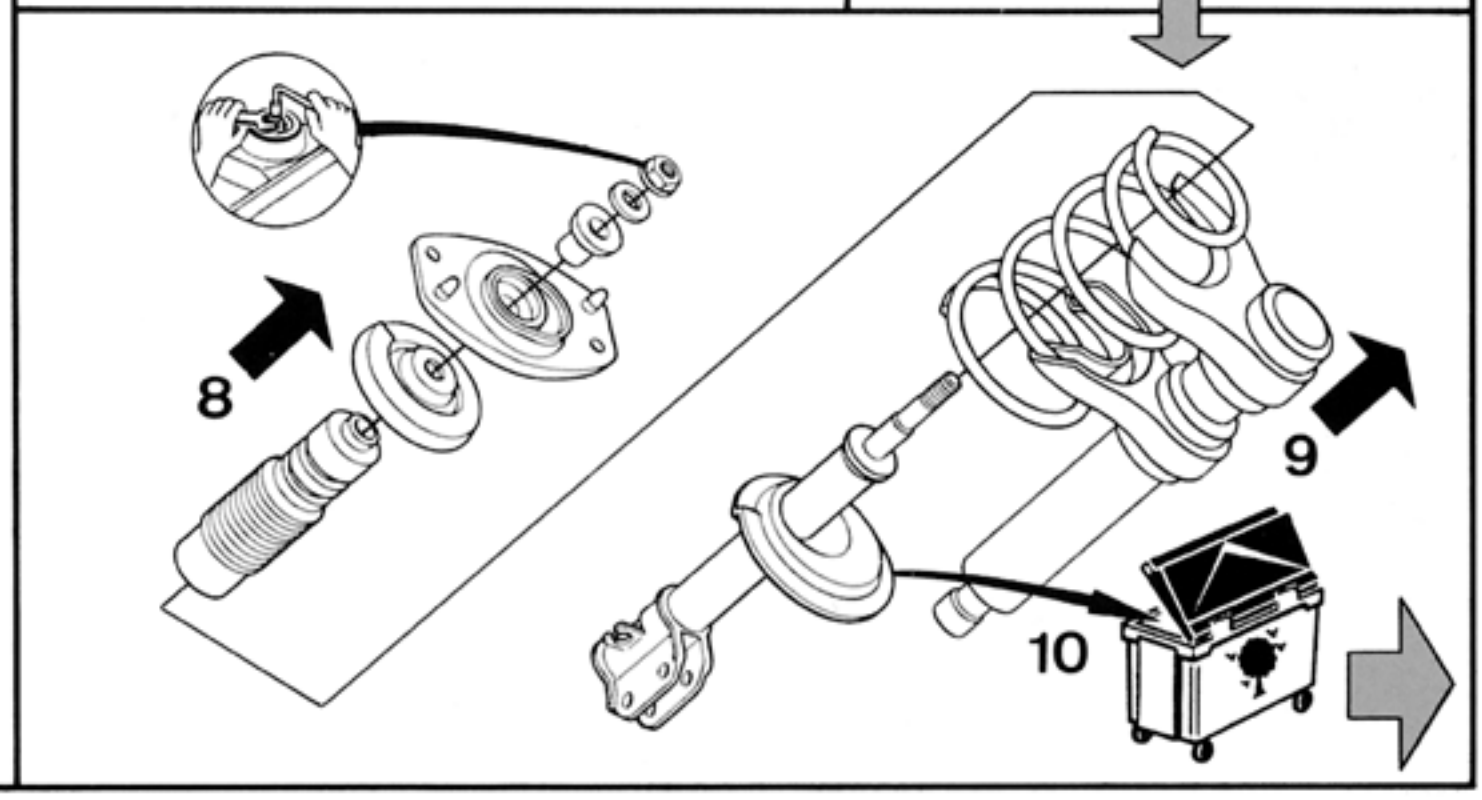

PRINTED IN BELGIUM 07/98

© Monroe all rights reserved