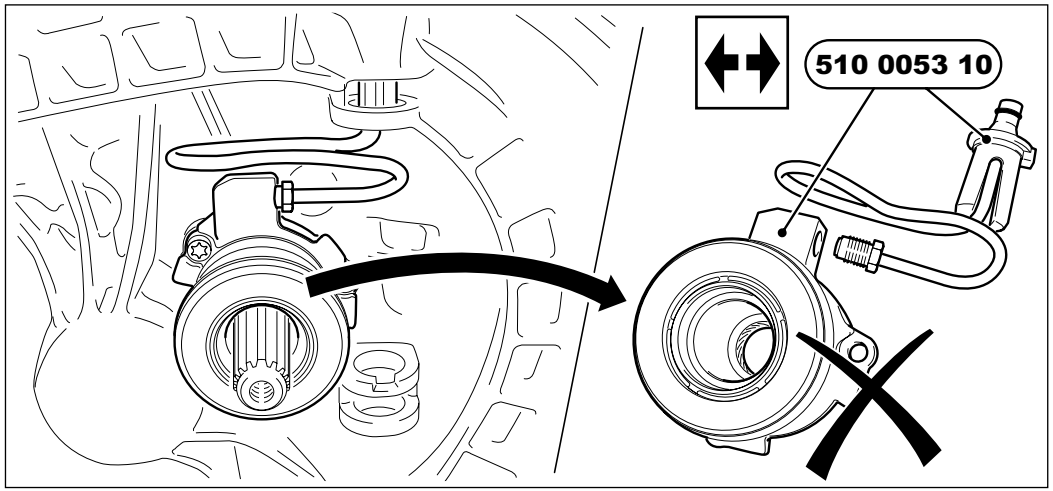

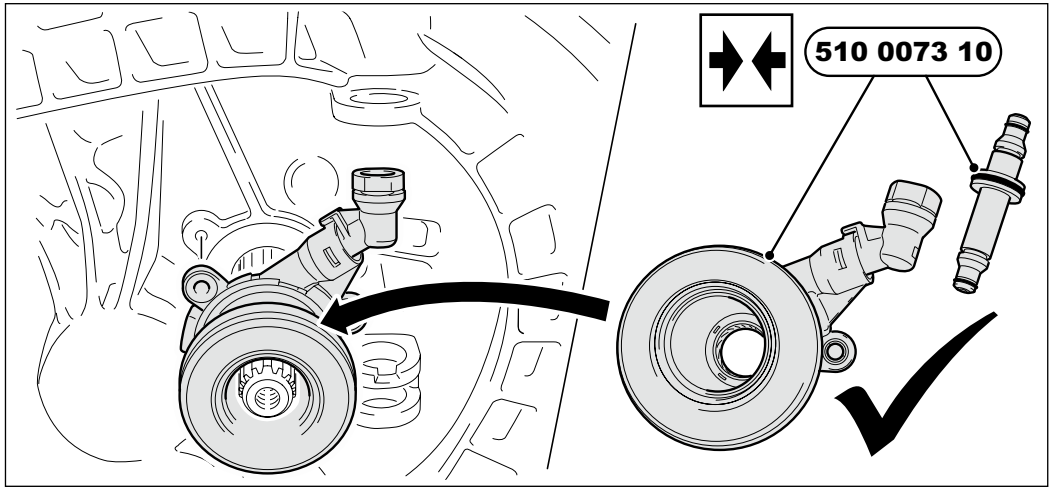

SCHAEFFLER
REP>XPERT

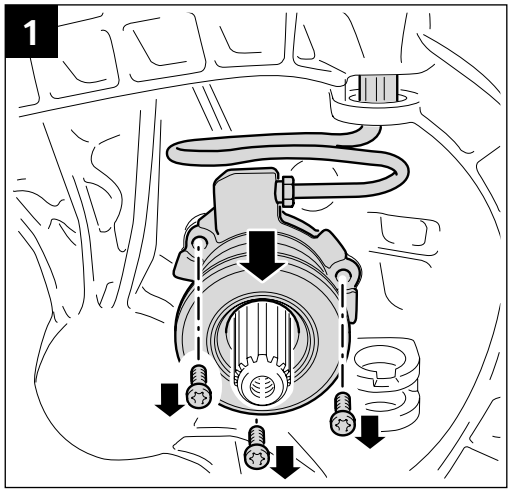

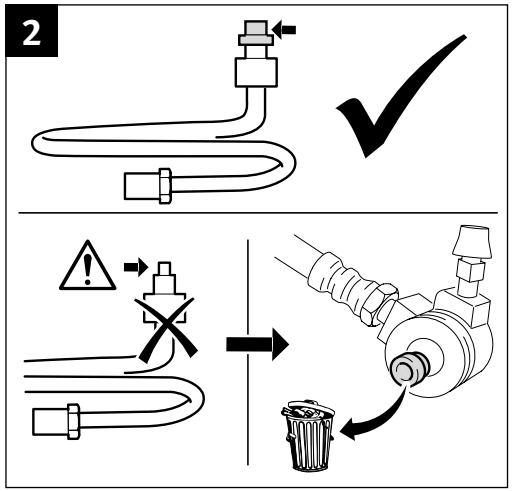

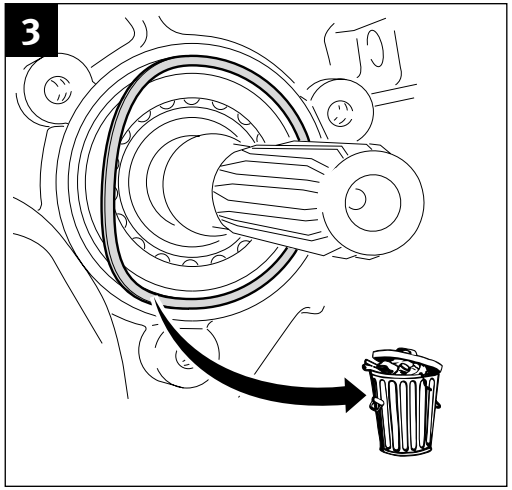

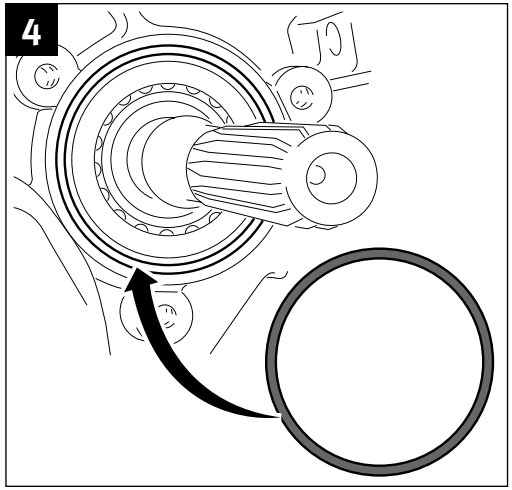

999 6001 680 © 2015 www.Schaeffler-Aftermarket.com

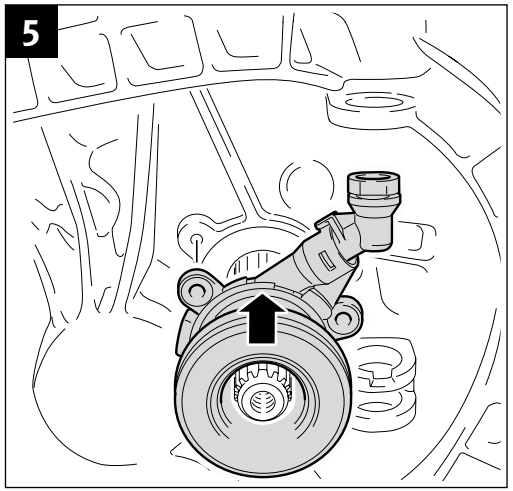

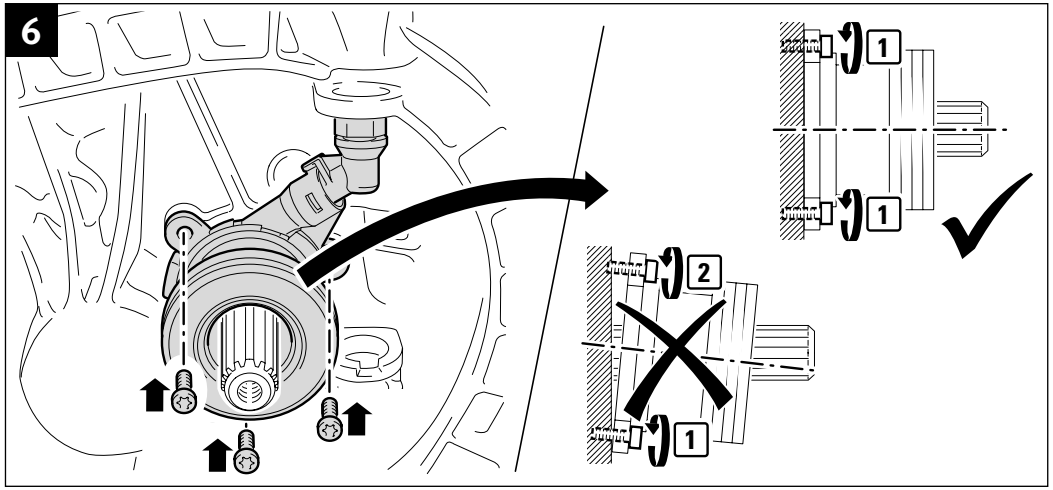
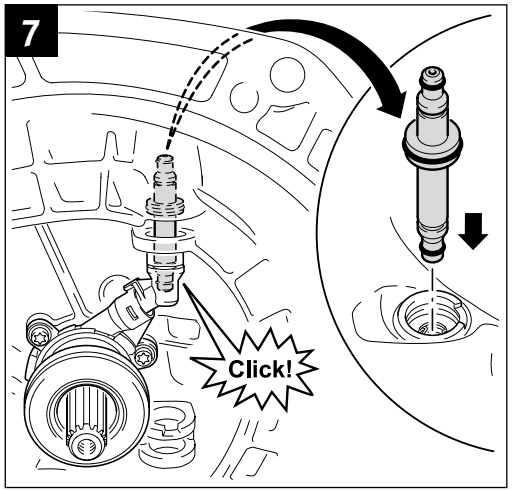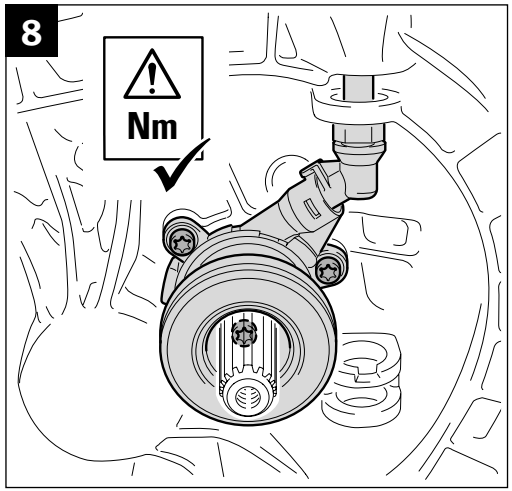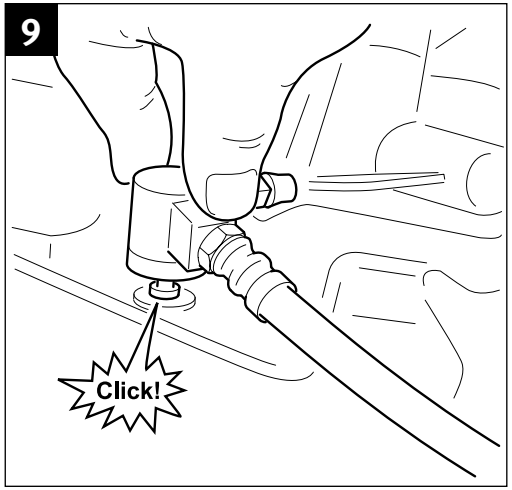
SCHAEFFLER
REP>XPERT