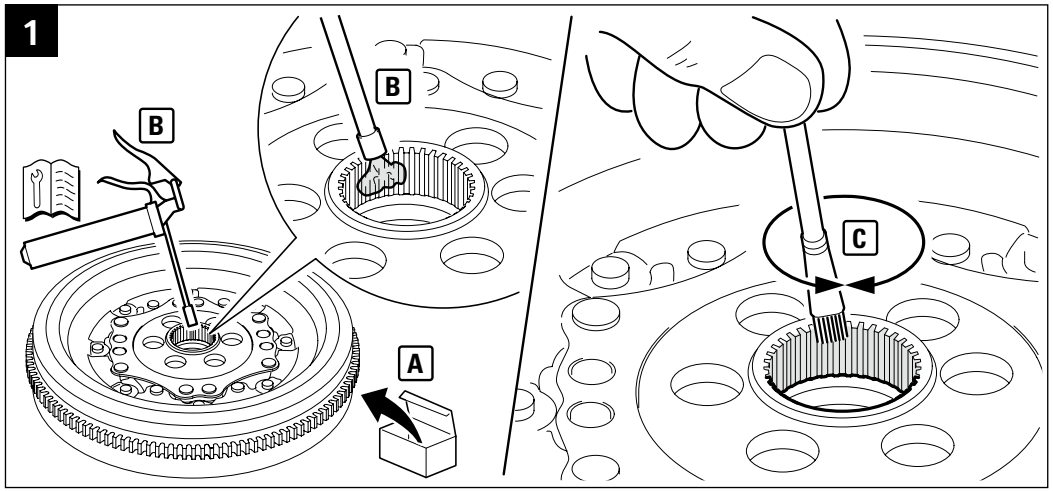

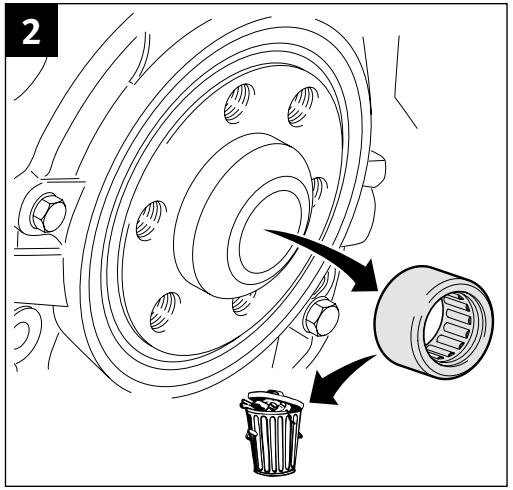

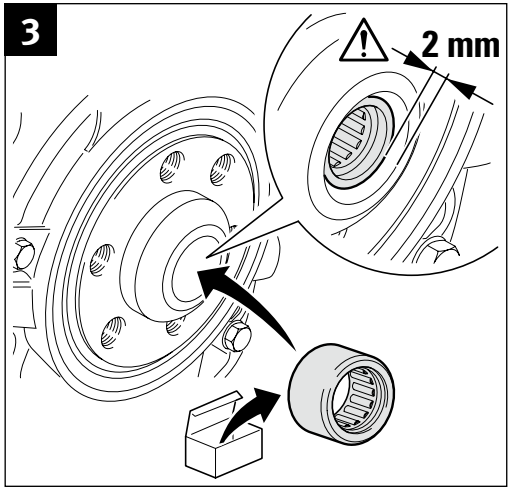

999 7007 990 © 2015 www.Schaeffler-Aftermarket.com

SCHAEFFLER
REP XPERT