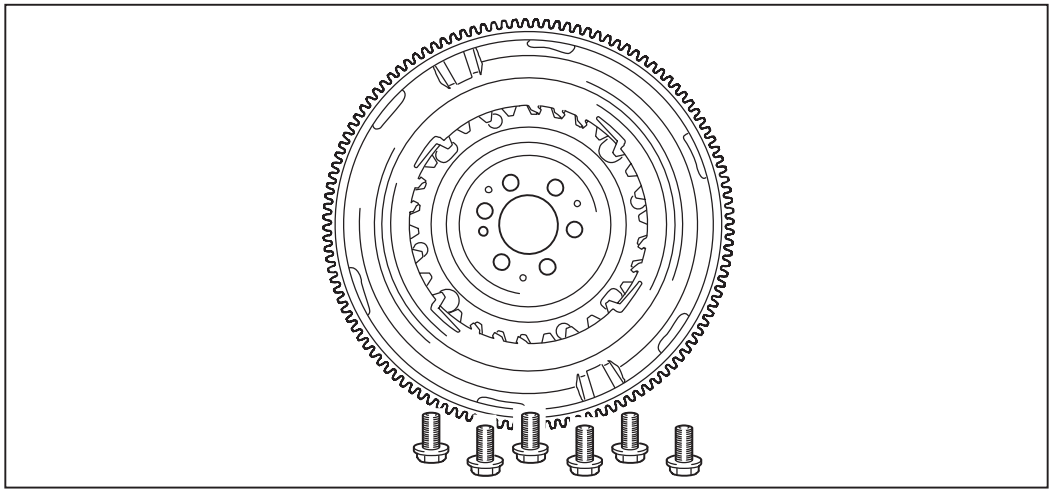

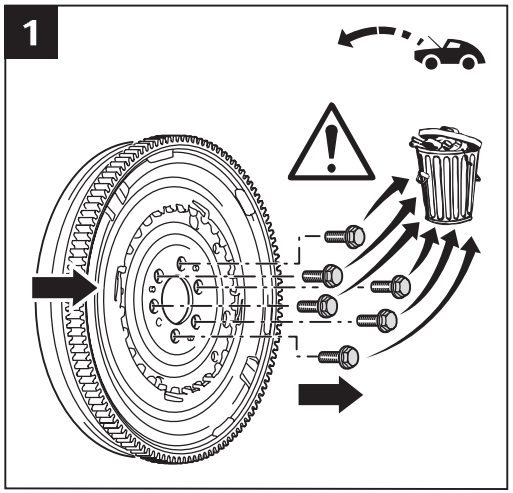

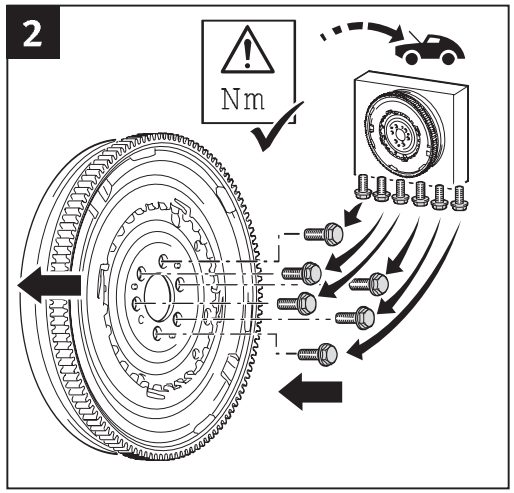

999 6005 400 © 2015 www.Schaeffler-Aftermarket.com

SCHAEFFLER AUTOMOTIVE AFTERMARKET
LuK INA FAG RUVILLE