SERVICE

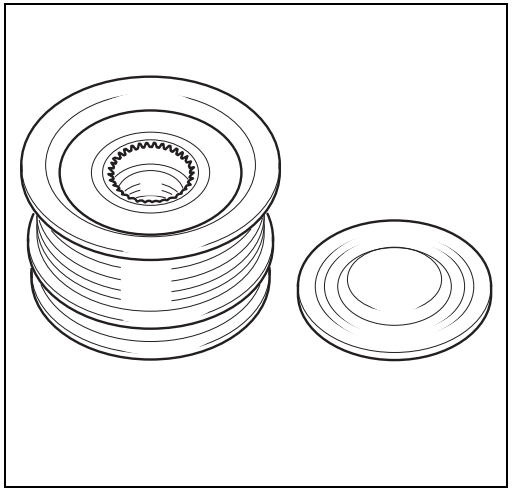

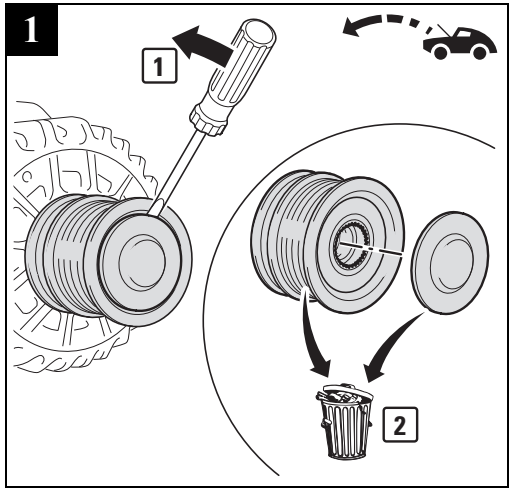

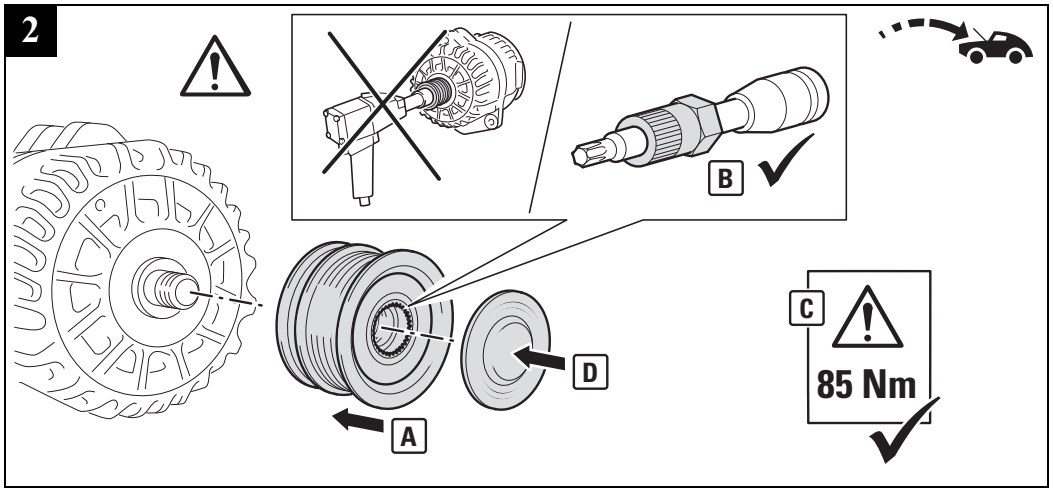

© 2010 Schaeffler Automotive Aftermarket GmbH & Co.oHG

999 6005 210